① Interfacing of IR sensor with Arduino

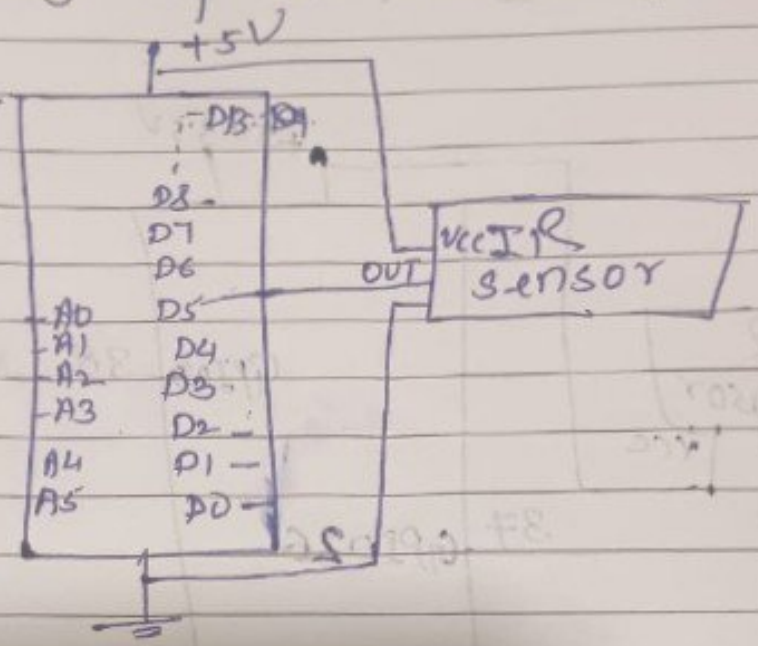

② Interfacing of Temprature sensor

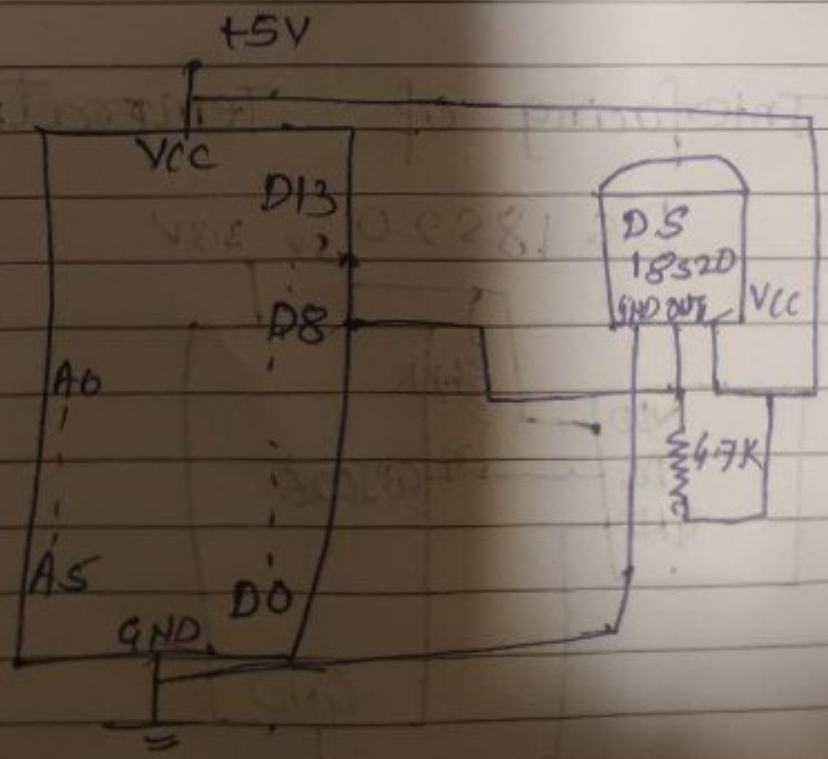

① Interfacing of IR sensor with Rpi

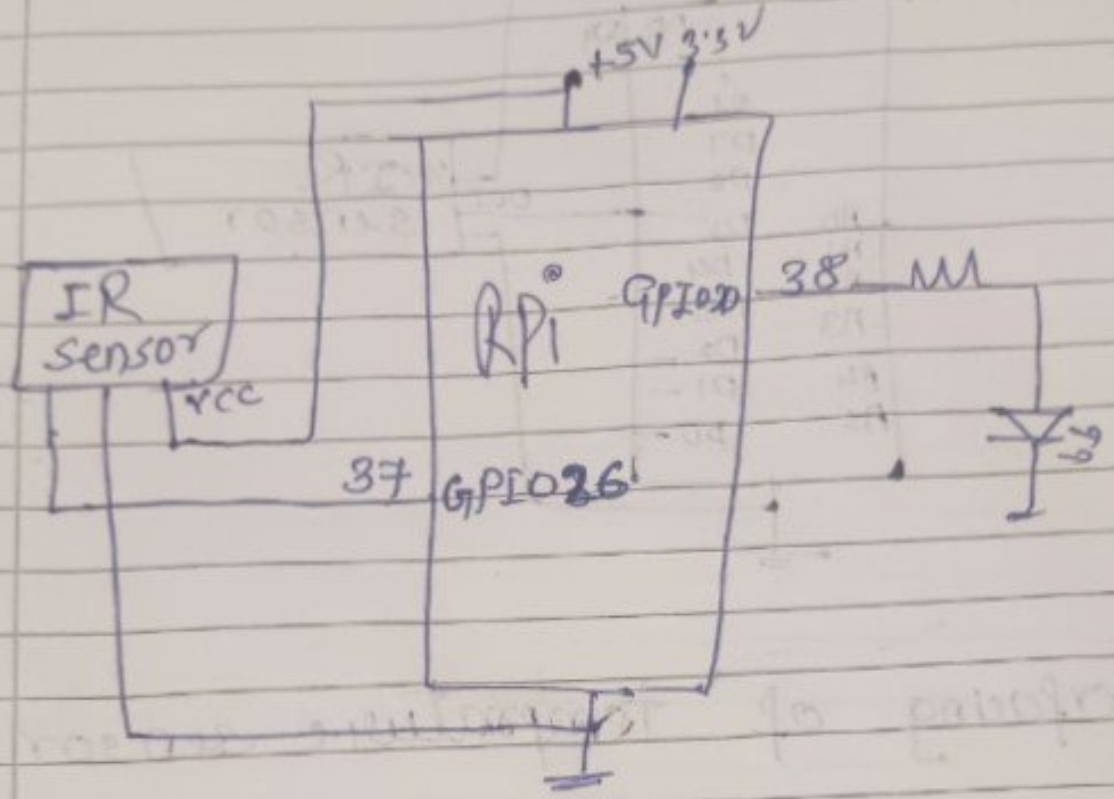

② Interfacing of Temprature sensor D.S 18S20

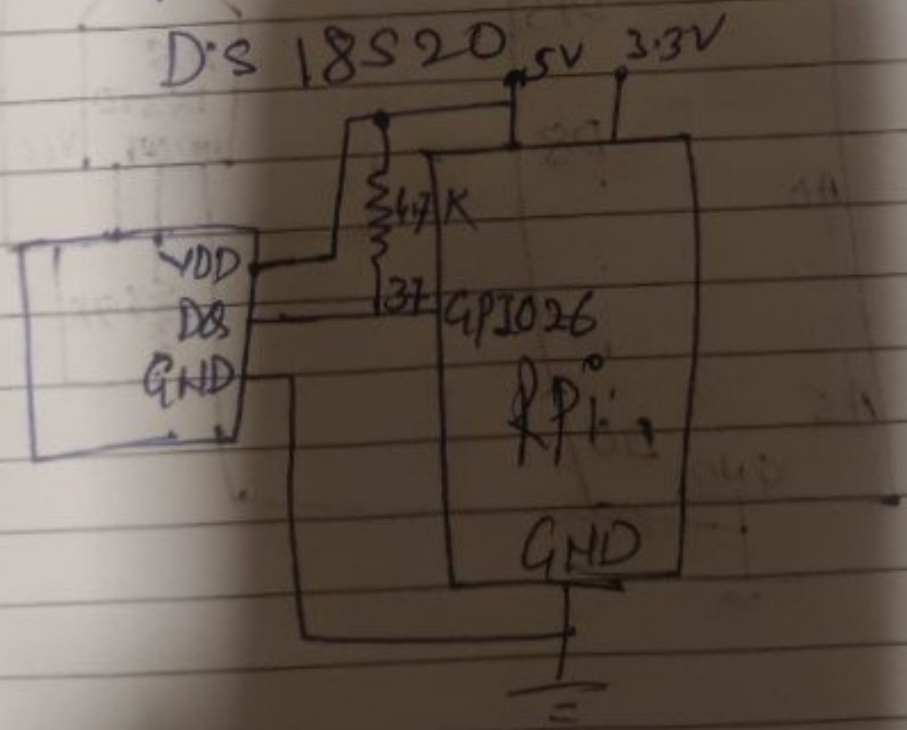

Interfacing of Bozzer with Rpi

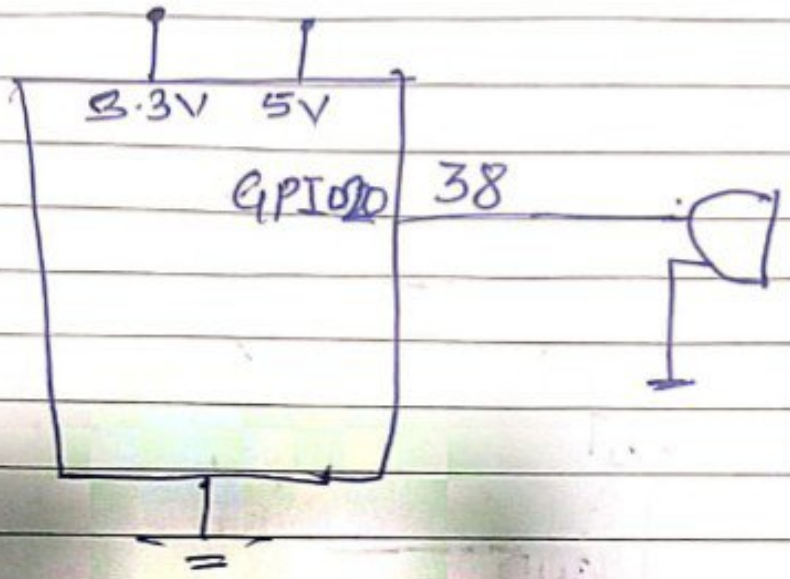

~~Arduino~~ ① LED Interfacing with Arduino

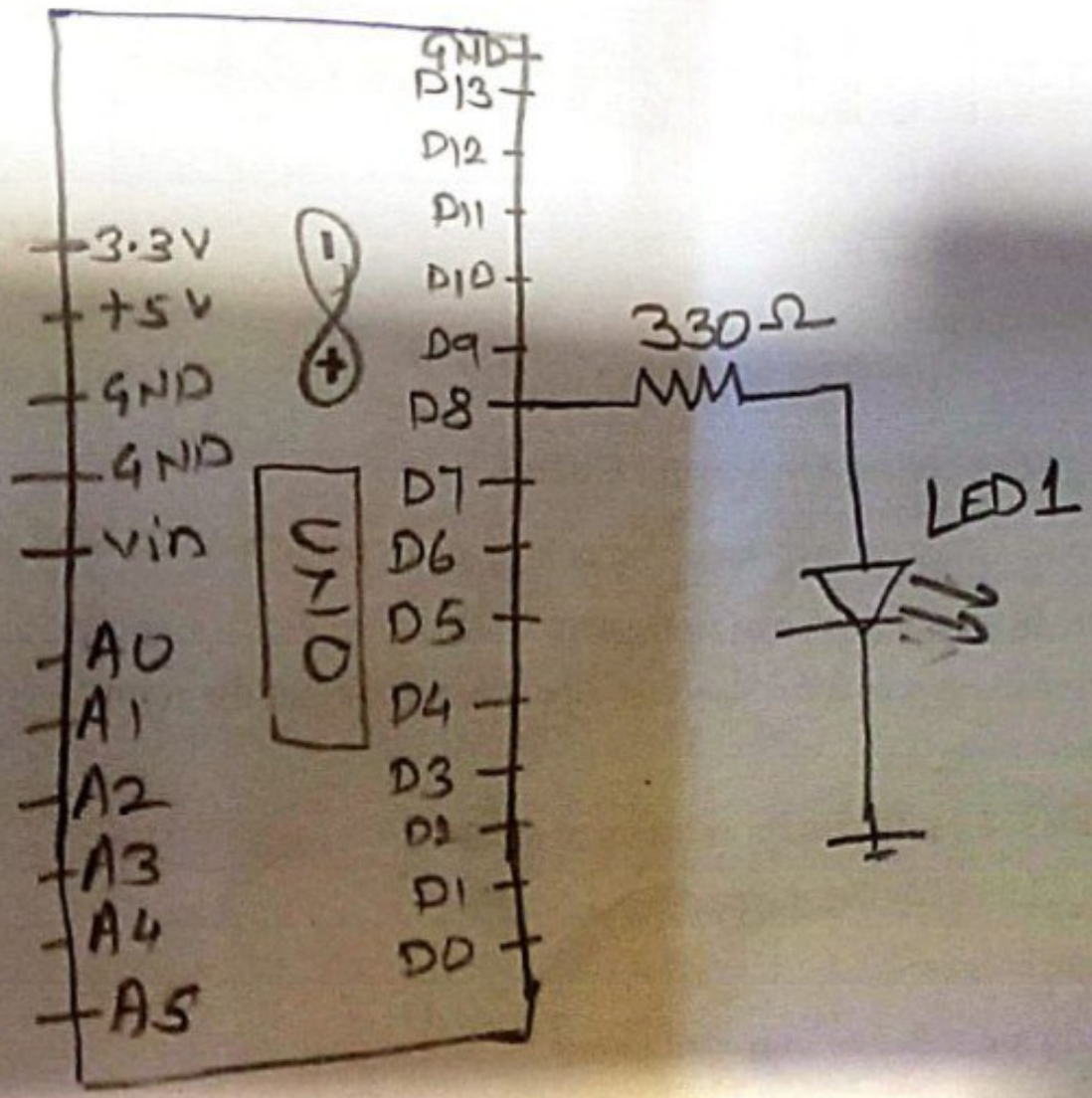

(3) write a code to turn ON/OFF buzzer using Arduino.

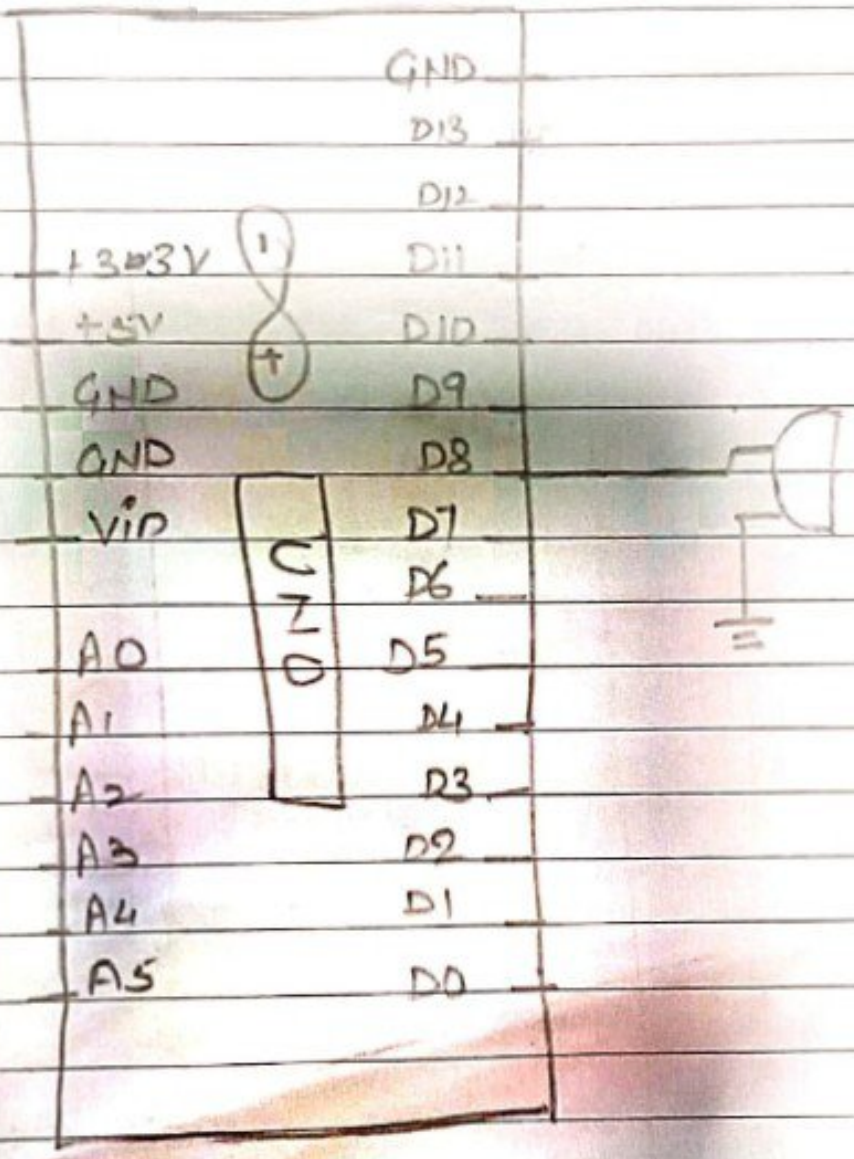

① Interfacing of LED with Rpi

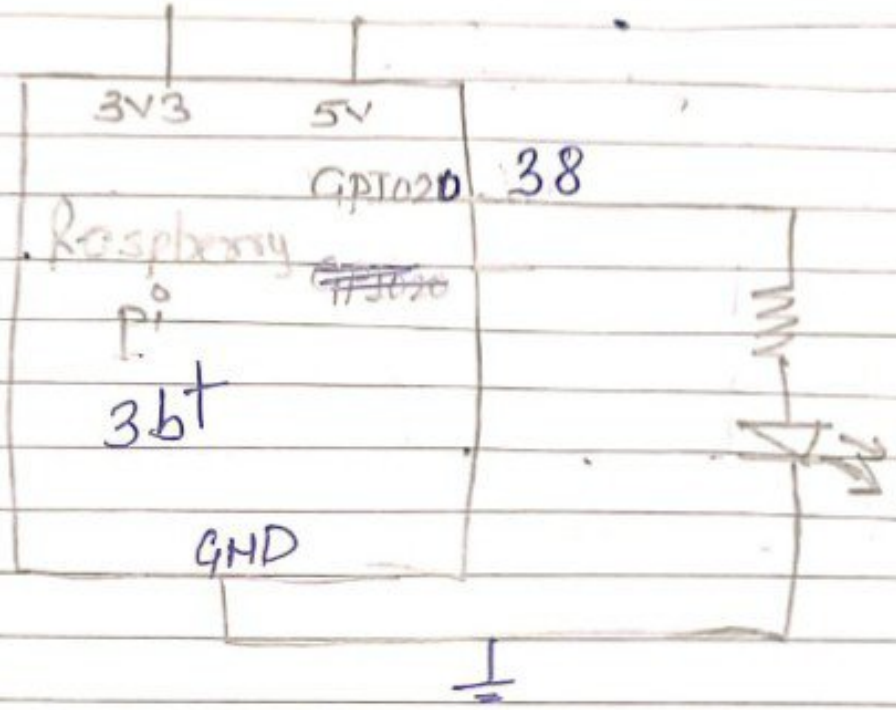

② Interfacing of two LEDs (toggle LED)

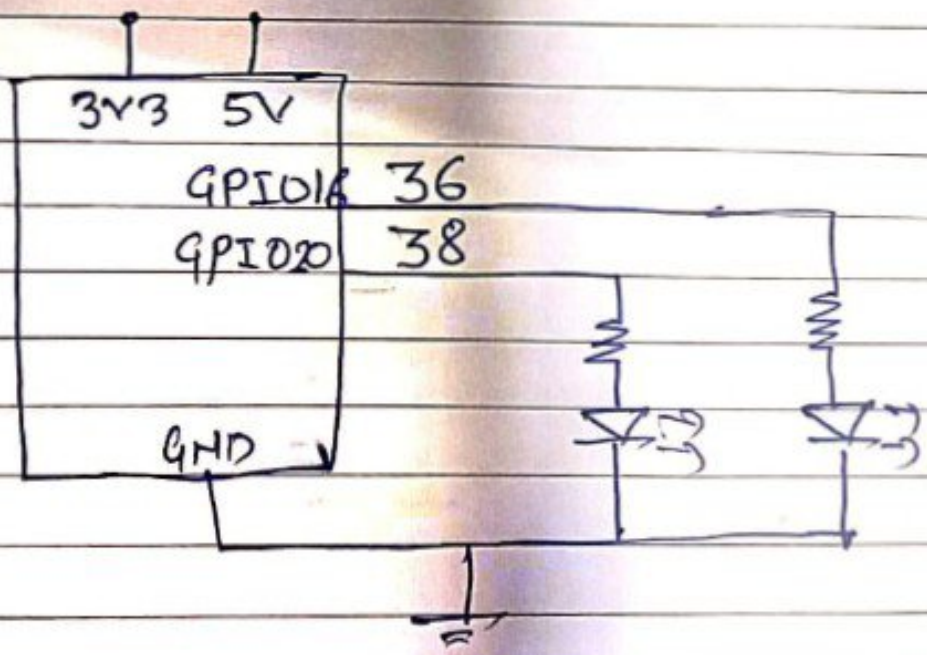
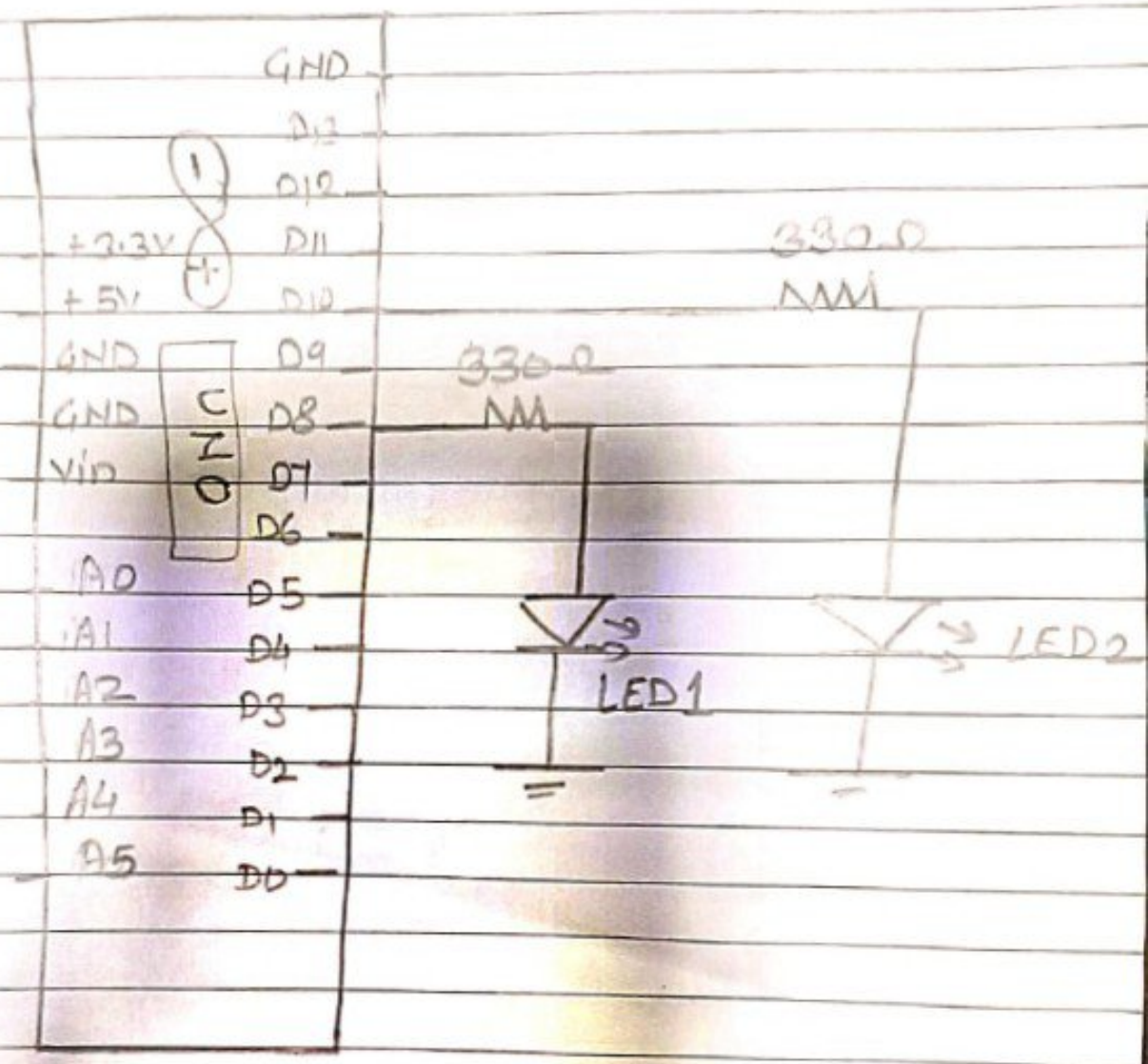
(2) Write a code to Toggle two LED's using Arduino.